Configuration Code ID14

Thermocouple Assemblies with Double Protection Tubes

The noble-metal thermocouple assemblies illustrated on this page are provided with double protection tubes. Outer protection tube choices of ceramic, metal alloys, or composite materials offer protection from a variety of high temperature process environments. All assemblies are provided with a ceramic inner tube. The inner tubes are cemented to the outer tube and are not replaceable, except for 18J assemblies. These assemblies are available with a variety of process mounting fittings and assembly options as listed below. Special construction designs are also available. **Note: Welded bushings will be welded at maximum length possible when X and U dimensions are specified as the same length. Actual U dimension will be 1 to 2 inches shorter than specified depending on bushing size.**

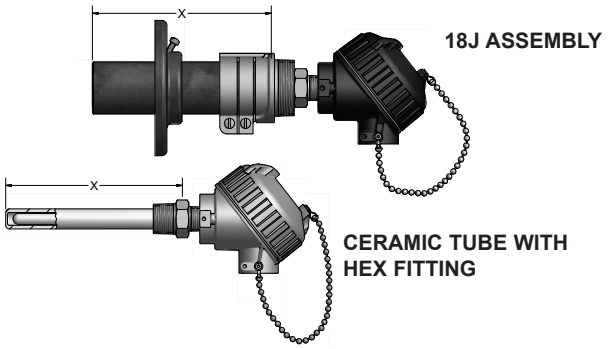

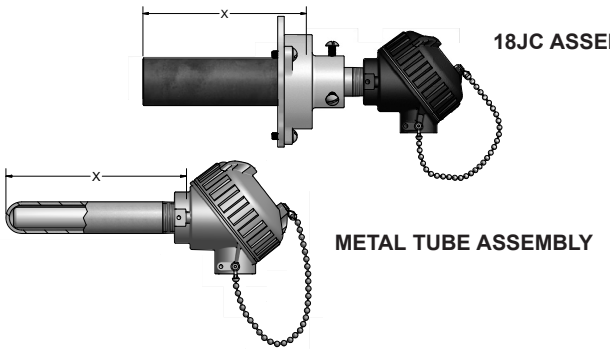

ORDER CODES

Example Order Number:

1		2		3		5	5-1
S24R	-	**16BH-18J**	-	**36**	-	**31,**	**H**

1 Thermocouple Type and Wire Gauge Size

CODE				
B24R	R24R	S24R	R26R	S26R
For duplex T/C's, use element type twice. Example: RR24R				

2 Protection Tubes (Inner and Outer)

CODE	MATERIAL TYPE		SIZE	PROCESS MOUNTING FITTING	
	INNER	OUTER	O.D. (inches)	NPT. THREAD (inches)	FITTING TYPE
17A-17BH	Alumina	Alumina	11/16	3/4	Hex fitting
17A-17B(E)	Alumina	Alumina	11/16	3/4	Nipple (specify length)
17A-12WH	Alumina	LT-1	7/8	1	Hex fitting
17BH-18J	Alumina	Silicon Carbide	1(3/4)	None	None
17BH-18JC	Alumina	Silicon Carbide	1(3/4)	None	Support flange
16A-16BH	Mullite	Mullite	11/16	3/4	Hex fitting
16A-16B(E)	Mullite	Mullite	11/16	3/4	Nipple (specify length)
16A-12WH	Mullite	LT-1	7/8	1	Hex fitting
16BH-18J	Mullite	Silicon Carbide	1(3/4)	None	None
16BH-18JC	Mullite	Silicon Carbide	1(3/4)	None	Support flange
16B-41-75	Mullite	HR-160	1.050	None	None
16B-7-75	Mullite	Alloy 601	1.050	None	None
17X-71BH	Alumina	RSiC	11/16	3/4	Hex fitting
17X-71B(E)	Alumina	RSiC	11/16	3/4	Nipple (specify length)
17A-71WH	Alumina	RSiC	7/8	1	Hex fitting
17A-71W(E)	Alumina	RSiC	7/8	1	Nipple (specify length)

HR-160 is a registered trademark of Haynes International, Inc.

4 Optional Welded Bushings (only on HR-160® and Alloy 601 Tubes)

CODE		DESCRIPTION
STEEL	*316 SS*	**BUSHING SIZE (inches)**
6E(U)	8E(U)	1 NPT Bushing
6F(U)	8F(U)	1 (1/4) NPT Bushing
6G(U)	8G(U)	1 (1/2) NPT Bushing
Substitute insertion length, in inches, measured from hot tip to bottom of bushing for (U) above. Insert NW in place of insertion length (U) for bushing supplied loose on tube.		

5 Head Terminations

CODE	DESCRIPTION
31	Aluminum screw-cover head
34	Cast-Iron screw-cover head
49	Flip-top aluminum head
91	316L SS screw-cover head

5-1 Assembly Options

CODE	DESCRIPTION
SB	1/2" NPT conduit reducer bushing
GS	Ground screw
NT	No mounting threads on pipe nipple
HT	Threaded flange on nipple
I	Stainless tag
8	316SS nipple or hex tube fitting
H	Adjustable steel mounting flange

3 Tube "X" Length

LENGTH (inches)	LENGTH (inches)
12	30
18	36
24	
Specify other lengths in 1" increments.	

© 2006 Pyromation, Inc.